ADSL

UM MODEL NO.:	SPECIFICATIONS	REV.	
UT20327	ADSL Transformer	A2	2005/44

Electrical specification at 25°C:

1.)Turns Ratio and Polarity	: 2CS : 1CS ±2% , Line side to Chip side.
2.)D.C.R.	: 1.76Ω max. , PIN(1-3-2-4) .
	: 0.56Ω max. , PIN(10-8-9-7) .
3.)Line side Inductance	: 400uH ±5% , at 10KHz 100mV, PIN(1-3-2-4)
4.)Leakage Inductance	: 14.0uH max. ,at 100KHz 100mV,PIN(1-3-2-4) ; PIN(10-8-9-7) shorted
5.)Inerwinding Capacitance	: 40pF max. at 100KHz 100mV , PIN(1-3-2-4) to PIN(10-8-9-7)
6.)T.H.D.	: -90dB max. ,at 100KHz 2.5V .
7.)HI-pot test	: 1500Vac 60s or 1875Vac 1s , Line side to Chip side .
8.)Operating Temperature	: -40 to +85 °C

Note: The SABF series transformer meets the specifications for supplementary insulation per UL60950-1, CSA60950-1, IEC60950-1 with working voltage of 250V.

Schematic diagram & Dimension:

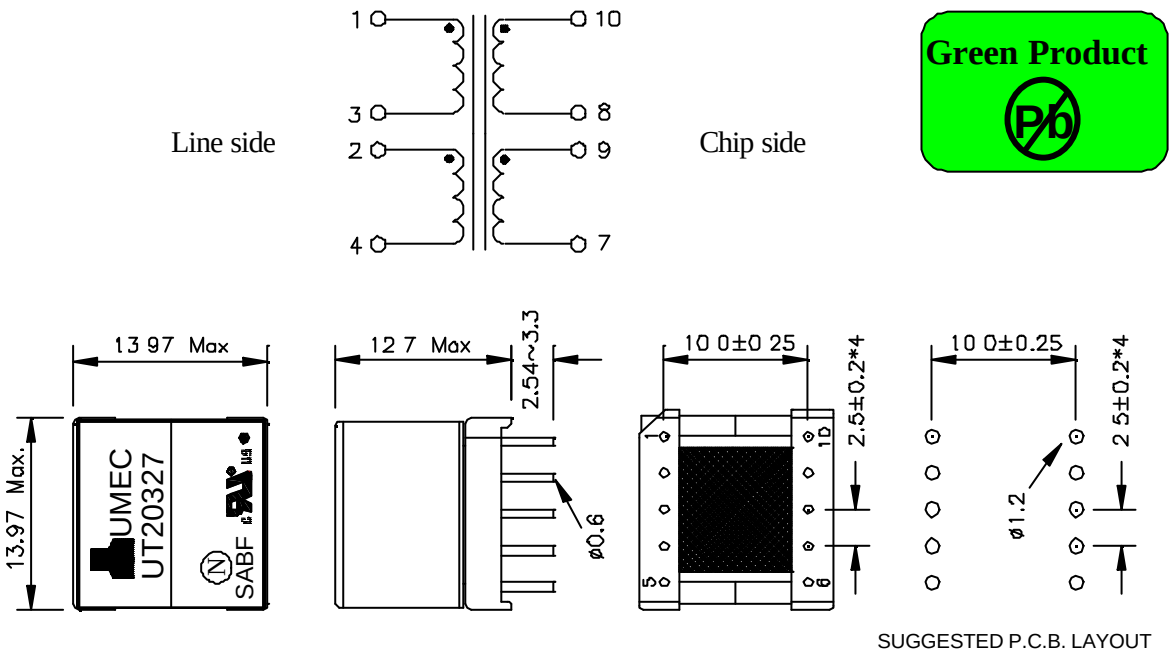

NOTE : 1. For RoHS compliant products:
a.) The UMEC ordering code: **TG-UT20327**
b.) Date Code suffix to "G" (xxxxG).
c.) Solder : Sn/Cu .
2. Specifications are subject to change without prior notice.

UNIT : mm

Tolerances : ±0.2mm

AGENCY APPROVALS			
UL60950-1	: FILE NO. E212730	**IEC60950-1**	: CB Rrf. #DK-8600
CSA 60950-1 (via C-UL)	: FILE NO. E212730	**Nordic, Japan, &Australia Deviations**	: CB Rrf. #DK-8600
Nemko (EN60950-1)	: Certificate NO. P05203908		

E10-033-C

UNIVERSAL MICROELECTRONICS CO.,LTD. *3,27TH RD.,TAICHUNG INDUSTRIAL PARK,*
TEL:886-4-23590096 FAX:886-4-23590129 *TAICHUNG,TAIWAN,R.O.C*
http://www.umec-web.com Email:business@umec.com.tw